BELLA FIGURA

Flat Drum chandelier

CL451

Collection Name
RETRO MURANO COLLECTION

Only 33cm (13”) high in all sizes, this chandelier is ideal for rooms with lower ceilings, over a table, island or peninsula. This piece encapsulates the grandeur of the retro Murano collection whilst still being subtle enough to avoid being overbearing within a room. The new satin Murano glass is a stunning addition to this range, diffusing the light in a subtle yet striking way

Test Certification

IEC (International Electrotechnical Commission) test certificates available - will incur a surcharge
UL (Underwriters Laboratories) test certificates available for the USA - will incur a surcharge

Compatible with

Bathroom

CL451 in Satin Triangular Flat Cut Murano Glass and Brushed Dark Bronze

Available Finishes

Metal Finishes

Chrome

Brushed Dark Bronze

Polished Gold

Murano Glass Colours

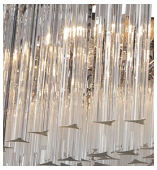

Clear Murano

Smoke Murano

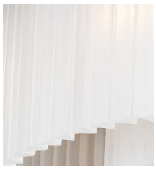

Satin Murano

Available Sizes

Size One
CL451-25,
Height: 33 cm (12.99")
Diameter: 25 cm (9.84")
3 × 40W E14
Max Watt and Lamps: 40W x 3
Net Weight: 12 kg / 26 lb

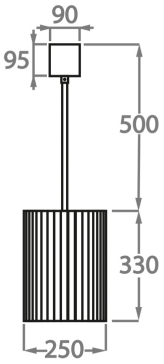

Size Two
CL451-35,
Height: 33 cm (12.99")
Diameter: 35 cm (13.78")
3 × 40W E27
Max Watt and Lamps: 40W x 3
Net Weight: 19 kg / 41 lb

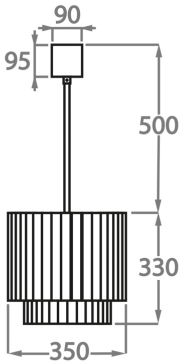

Size Three
CL451-45,
Height: 33 cm (12.99")
Diameter: 45 cm (17.72")
4 × 40W E27
Max Watt and Lamps: 40W x 4
Net Weight: 30 kg / 66 lb

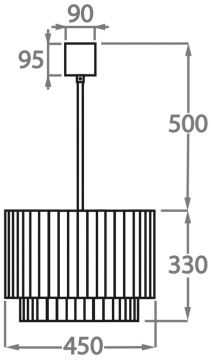

Size Four
CL451-60,
Height: 33 cm (12.99")
Diameter: 60 cm (23.62")
6 × 40W E27
Max Watt and Lamps: 40W x 6
Net Weight: 34 kg / 74 lb

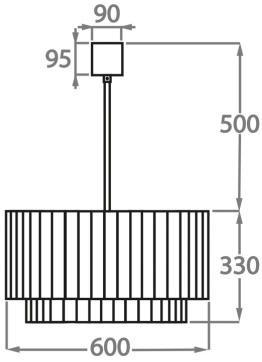

Size Five
CL451-75,
Height: 33 cm (12.99")
Diameter: 75 cm (29.53")
8 × 40W E27
Max Watt and Lamps: 40W x 8
Net Weight: 40 kg / 88 lb

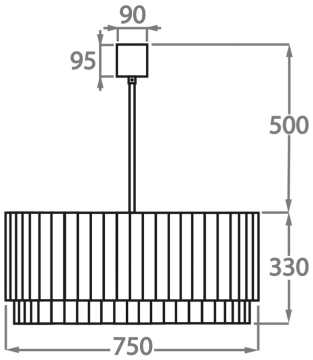

Size Six
CL451-90,
Height: 33 cm (12.99")
Diameter: 90 cm (35.43")
9 × 40W E27
Max Watt and Lamps: 40W x 9
Net Weight: 64 kg / 141 lb

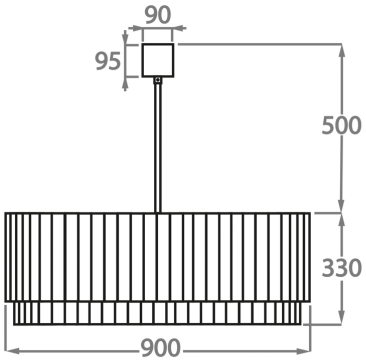

Size Seven
CL451-100,
Height: 33 cm (12.99")
Diameter: 100 cm (39.37")
12 × 40W E27
Max Watt and Lamps: 40W x 12
Net Weight: 96 kg / 211 lb

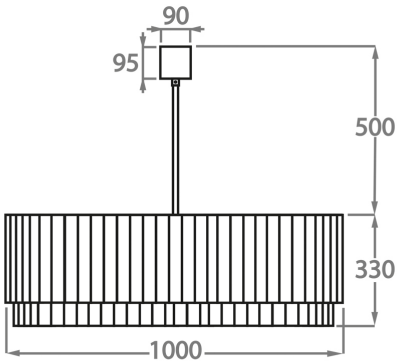

Size Eight
CL451-120,
Height: 33 cm (12.99")
Diameter: 120 cm (47.24")
12 × 40W E27
Max Watt and Lamps: 40W x 12

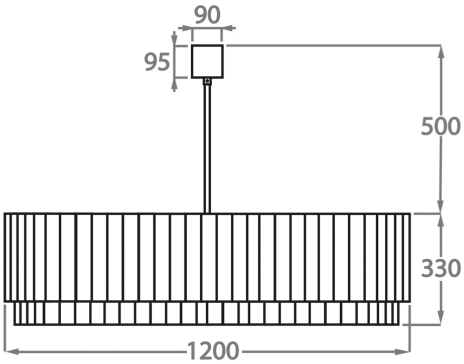

Size Nine
CL451-130,
Height: 33 cm (12.99")
Diameter: 130 cm (51.18")
18 × 40W E27
Max Watt and Lamps: 40W x 18
Net Weight: 138 kg / 304 lb

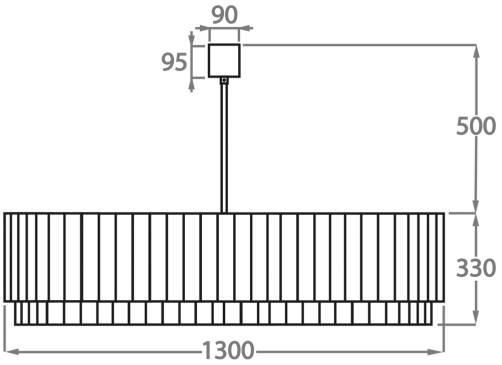

The dimensions of the central rod/chain and ceiling rose are not included in the height measurements.
Standard rod/chain and ceiling rose is 50cm if not otherwise specified by customer.