BELLA FIGURA

Triple Drum Droplet Chandelier

CL463-3T

Collection Name
RETRO MURANO COLLECTION

The Droplet chandelier is available in three brushed metal finishes and is adorned with both clear and smoke marble effect glass droplets. This thought-provoking piece is an emotive focal point and its dark smoke effect is captivating and unique in its design, now designed in a striking triple drum version.
Finish note: Due to the nature of our hand made product our finishes can vary from piece to piece. Please be aware studio lighting can affect tone of metals and alter material appearance slightly. For more details, speak to your sales advisor who may be able to organise sampling upon request.

CL463-3T-100 in Clear and Smoke Scallop Glass and Brushed Gold

Test Certification

IEC (International Electrotechnical Commission) test certificates available - will incur a surcharge
UL (Underwriters Laboratories) test certificates available for the USA - will incur a surcharge

Compatible with

Bathroom

Available Finishes

Metal Finishes

Brushed Dark Bronze

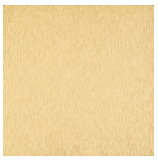

Brushed Gold

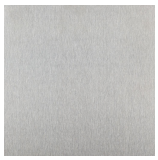

Brushed Nickel

Murano Glass Colours

Clear & Smoke Scallop Glass

Clear Scallop Glass

Available Sizes

Size One
CL463-3T-60,
Height: 28.5 cm (11.22")
Diameter: 60 cm (23.62")
9 × 2.5W LED G9
Max Watt and Lamps: 2.5W LED x 9
Net Weight: 30 kg / 67 lb

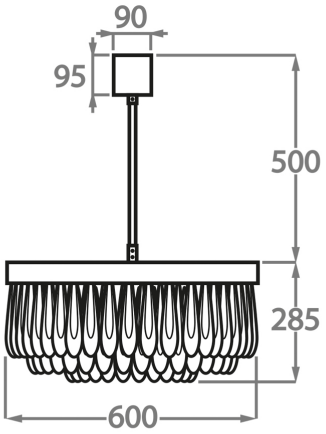

Size Two
CL463-3T-80,
Height: 28.5 cm (11.22")
Diameter: 80 cm (31.5")
12 × 2.5W LED G9
Max Watt and Lamps: 2.5W LED x 12
Net Weight: 42 kg / 93 lb

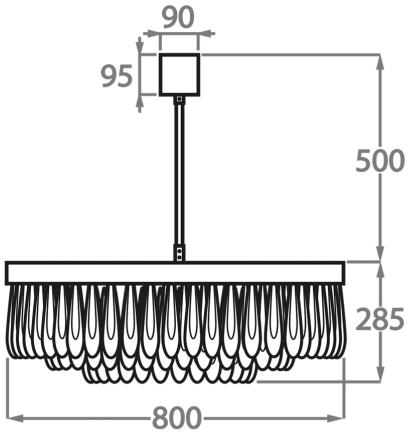

Size Three
CL463-3T-100,
Height: 28.5 cm (11.22")
Diameter: 100 cm (39.37")
15 × 2.5W LED G9
Max Watt and Lamps: 2.5W LED x 15
Net Weight: 53 kg / 117 lb

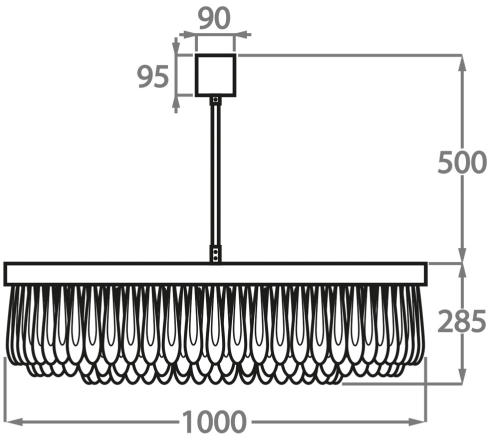

The dimensions of the central rod and ceiling rose are not included in the height measurements. The standard rod and ceiling rose height is 50cm (20") if not otherwise specified by customer.

Min. height with rod/chain is 15cm including ceiling rose.

Max. height with rod is 100-120cm. Longer lengths will be made in sections.

Finish note: Due to the nature of our hand made product our finishes can vary from piece to piece. Please be aware studio lighting can affect tone of metals and alter material appearance slightly. For more details, speak to your sales advisor who may be able to organise sampling upon request.